saheco

SF-SA60

I N T E R N O

Poligono Industrial Foradada - 08580 - Sant Quirze de Besora (Barcelona)
Telf. 34-93.852.92.23, Fax. 34-93.852.91.76
e-mail: saheco@saheco.com
web : www.saheco.com

GRUPO
TORREMAT

8 422204 805908

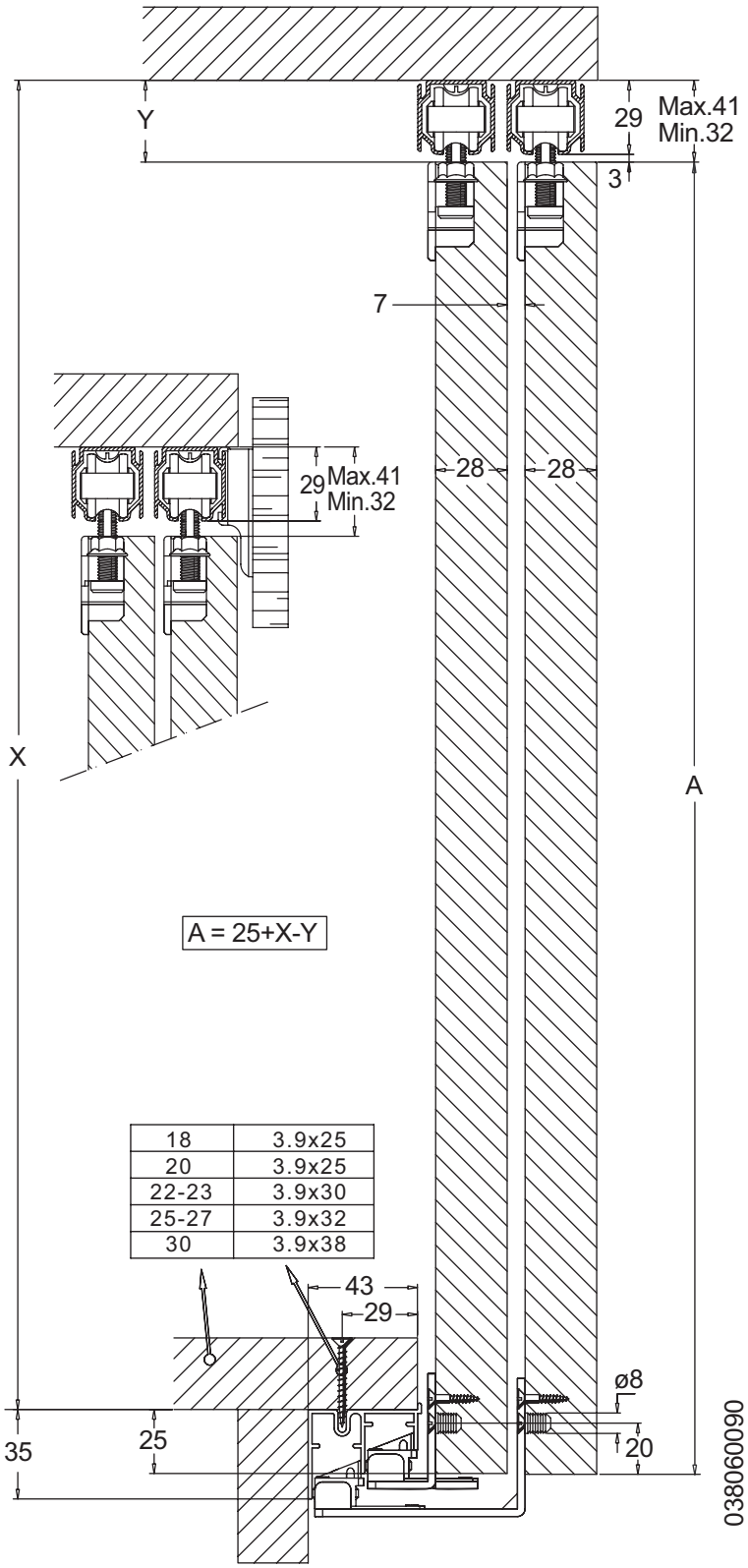

18	3.9x25
20	3.9x25
22-23	3.9x30
25-27	3.9x32
30	3.9x38

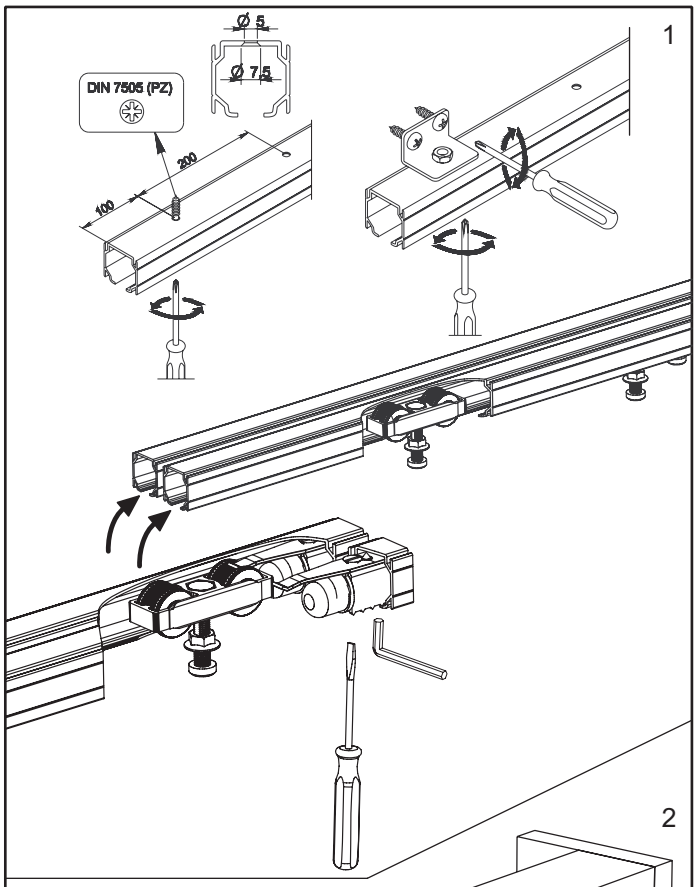

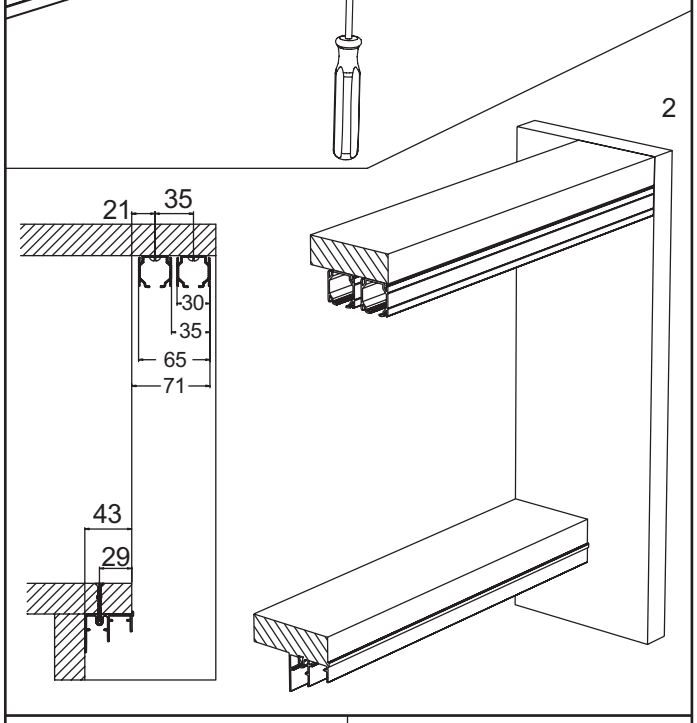

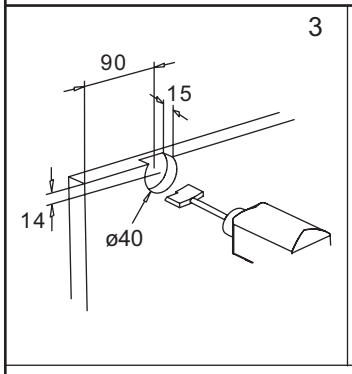

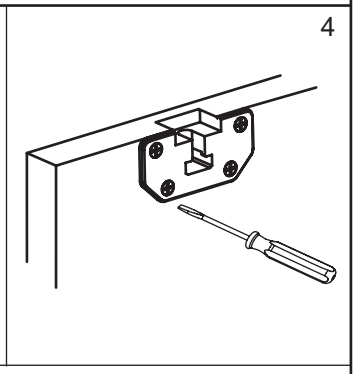

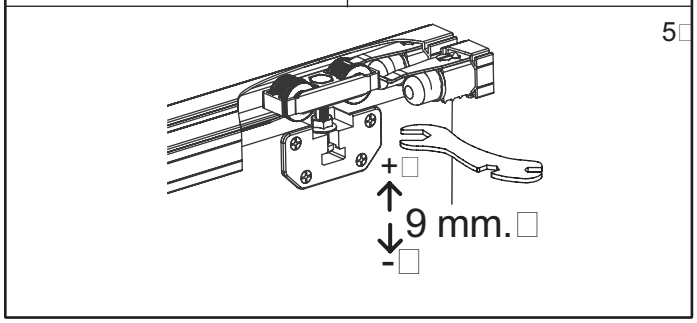

صنـع فى السـوق الأوروبيـة

MADE IN E.U.

6

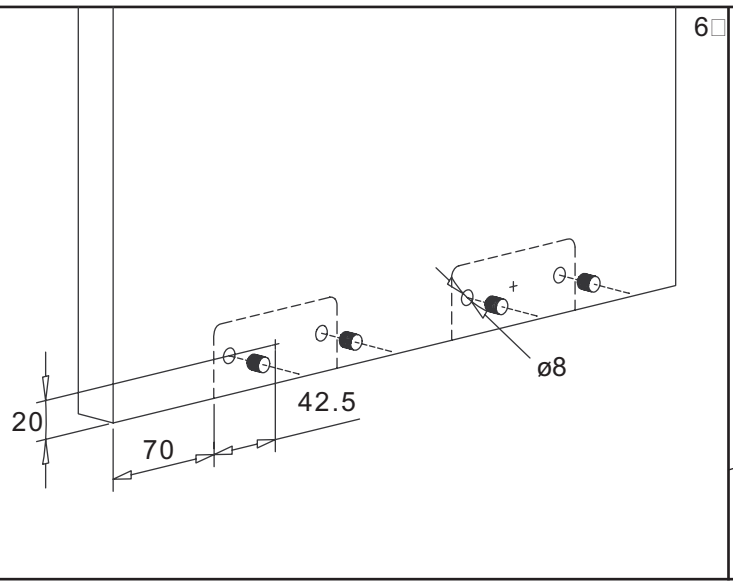

7

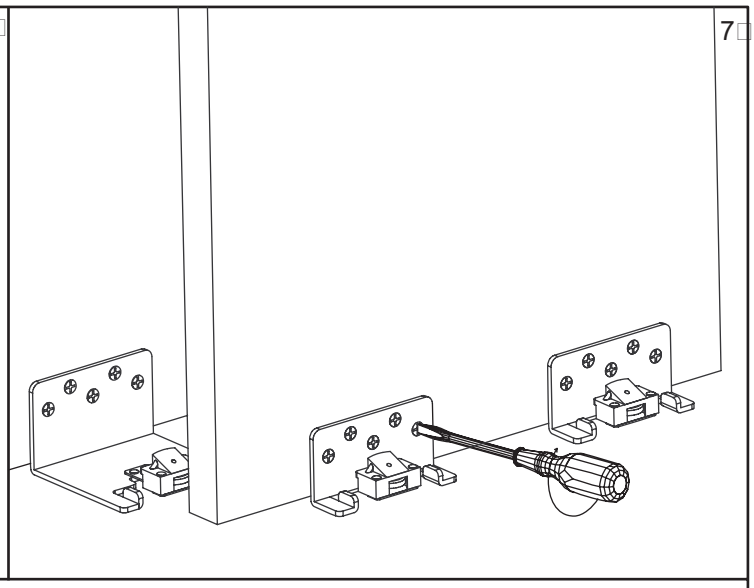

8

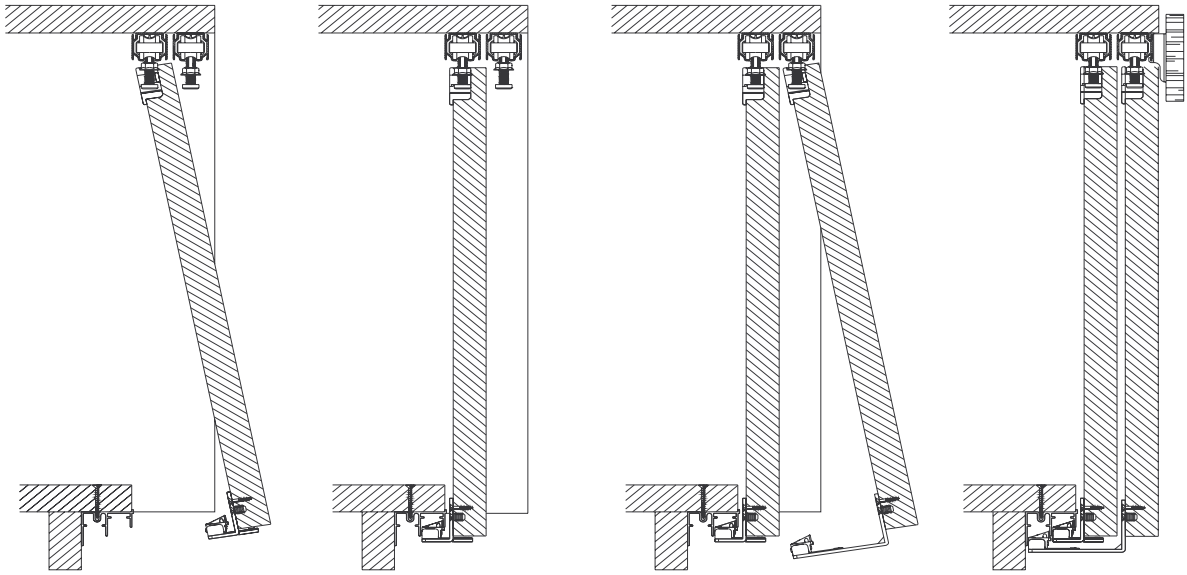

9

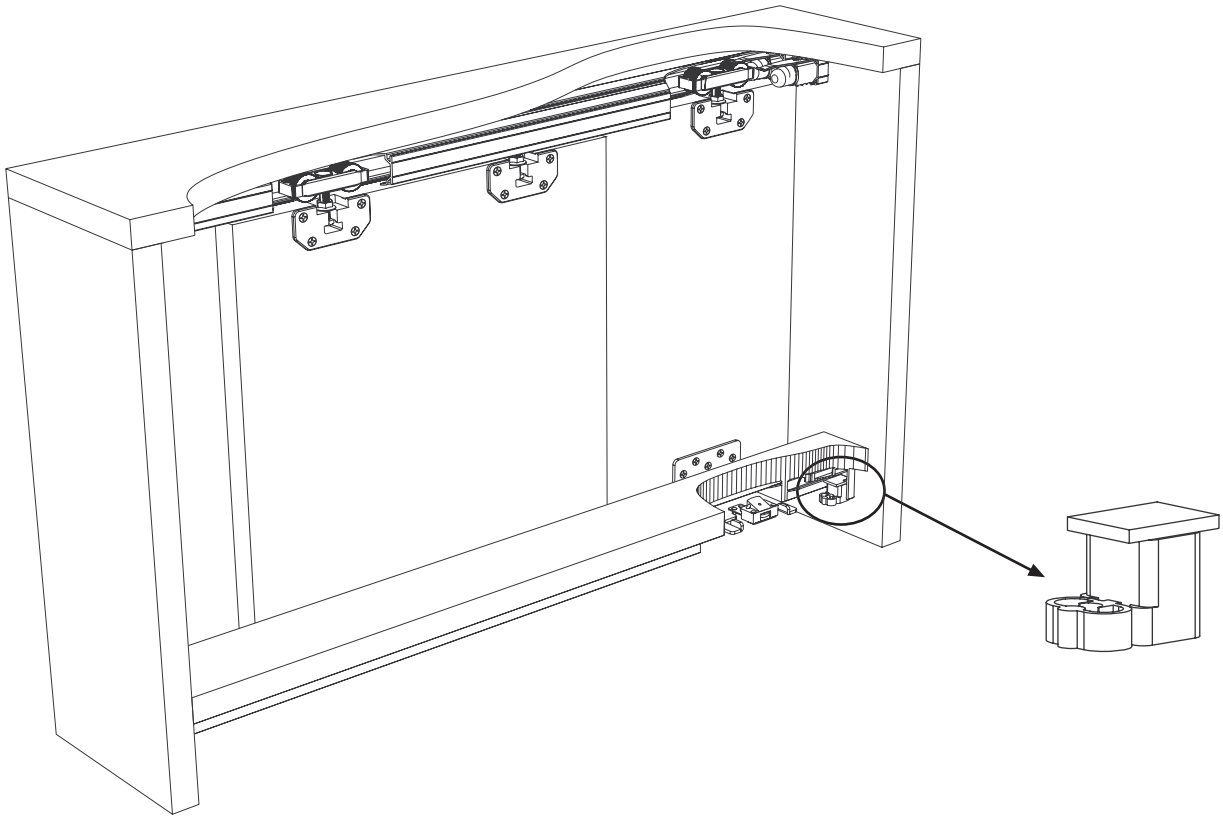

6

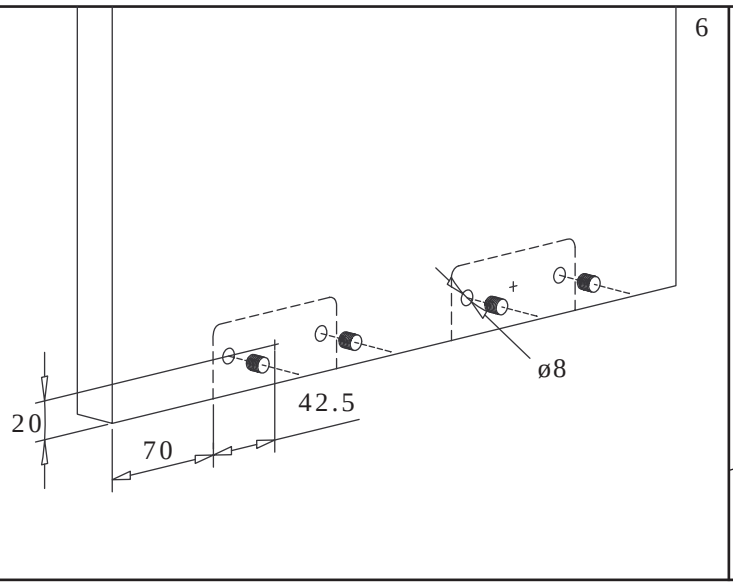

7

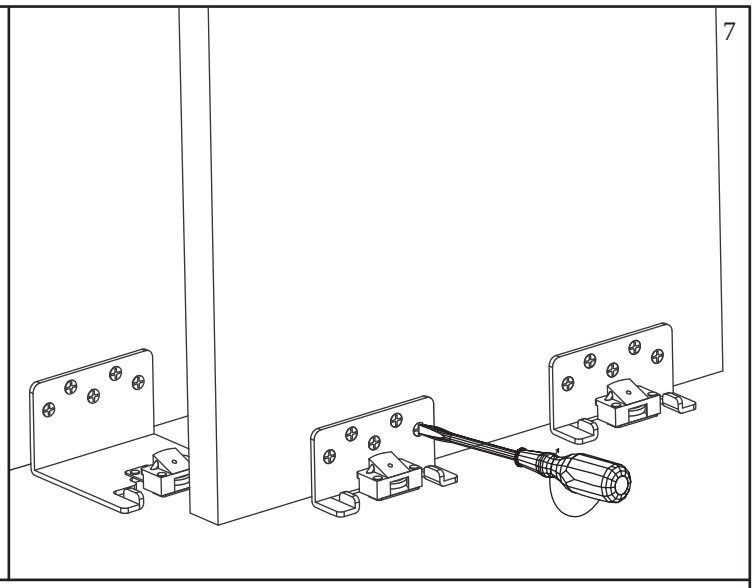

8

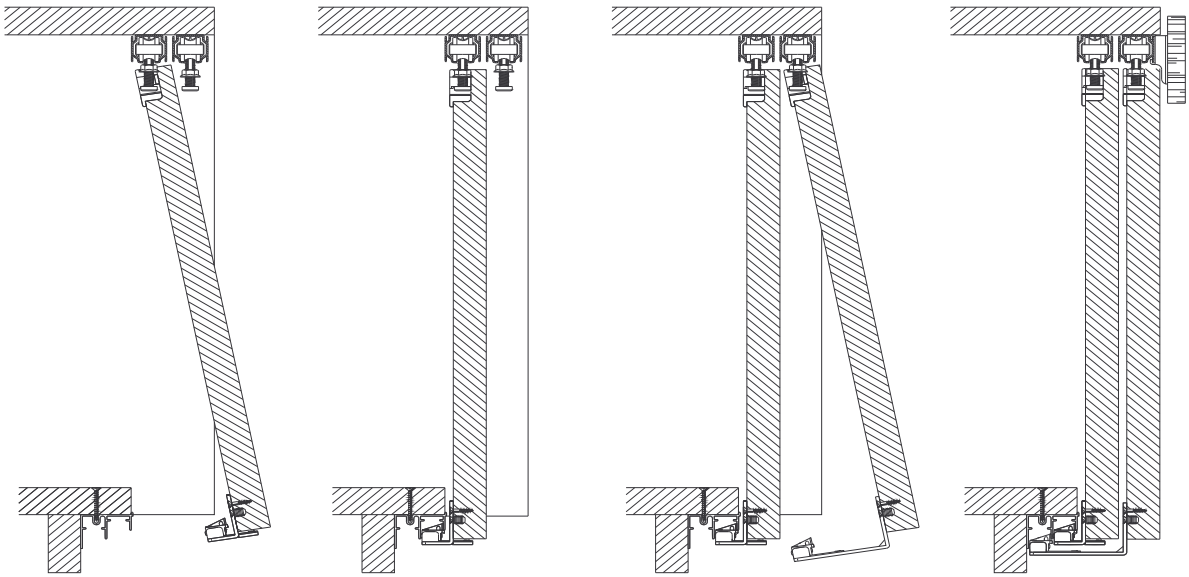
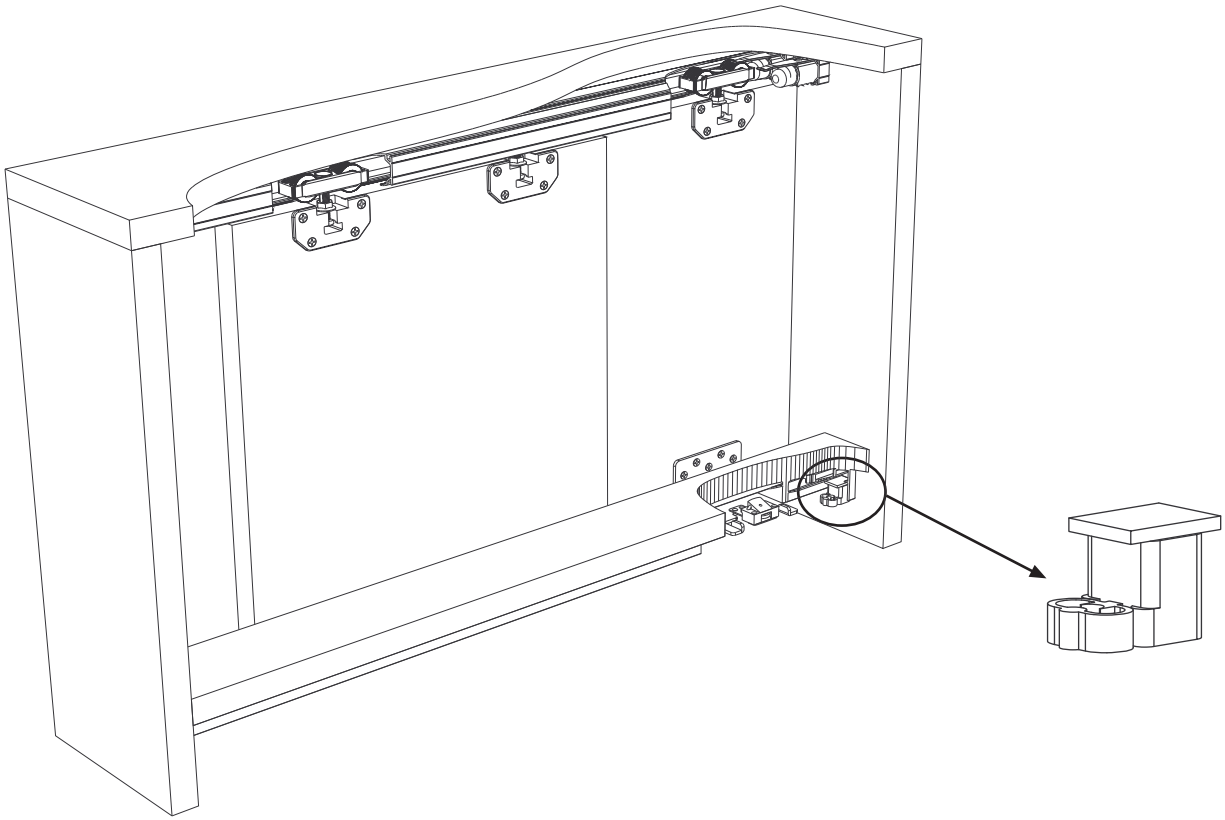
9